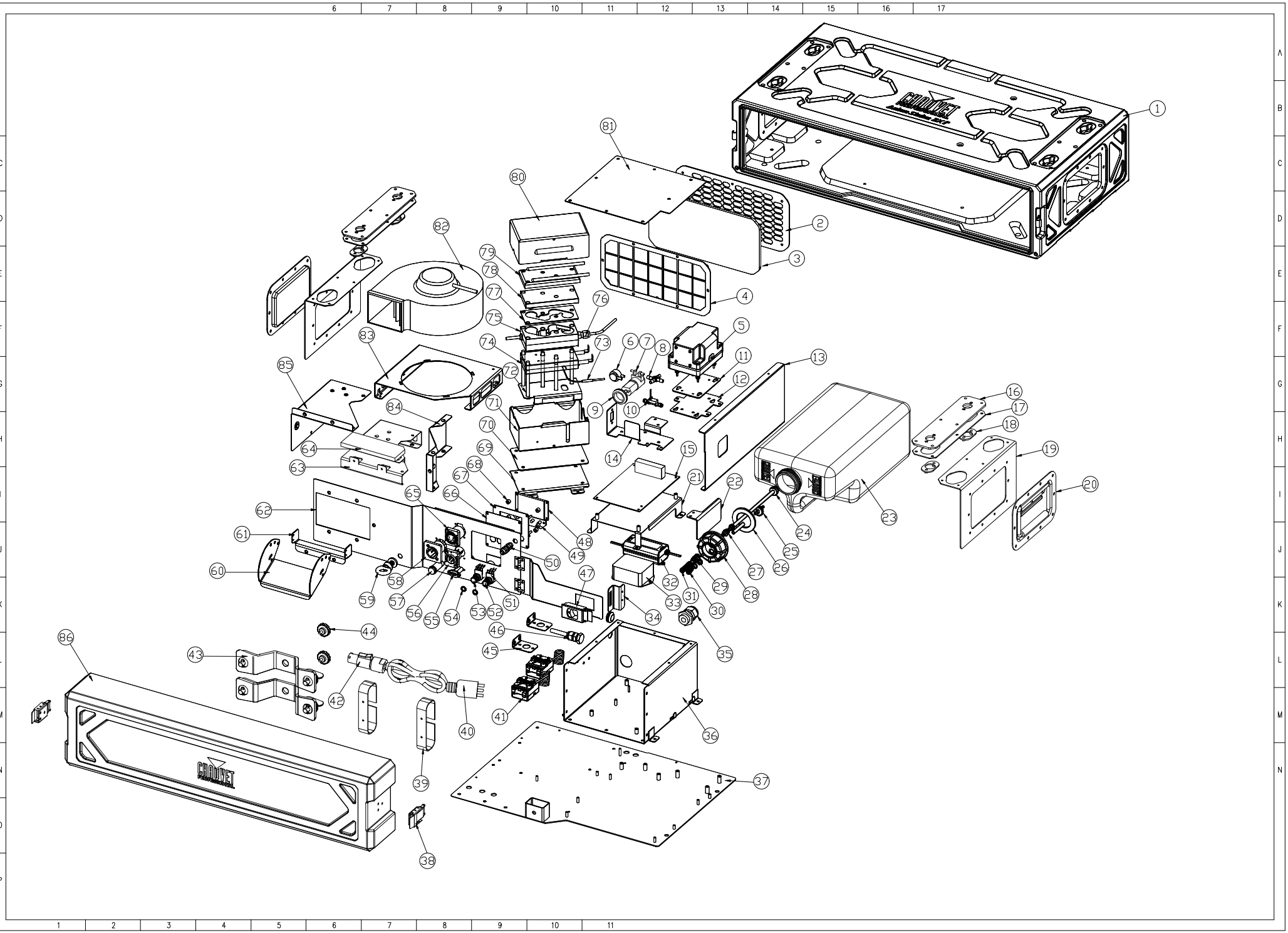
1
2
3
4
5
6
7
8
9
10
11
12
13
14
15
16
17
18
19
20
21
22
23
24
25
26
27
28
29
30
31
32
33
34
35
36
37
38
39
40
41
42
43
44
45
46
47
48
49
50
51
52
53
54
55
56
57
58
59
60
61
62
63
64
65
66
67
68
69
70
71
72
73
74
75
76
77
78
79
80
81
82
83
84
85
86

EXPLODED DIAGRAM REF STATIC	FIXTURE	PART NUMBER	DESCRIPTION
1	AMHAZESTADIUM2XIP	PTI104020487	Rotomolded Box (BOM#1)
2	AMHAZESTADIUM2XIP	PTI101013881	Dustproof plate (BOM#2)
3	AMHAZESTADIUM2XIP	PTI118020445	Absorbent sponge (BOM#3)
4	AMHAZESTADIUM2XIP	PTI101013897	Baffle for dustproof cotton (BOM#4)
5	AMHAZESTADIUM2XIP	PTI117020119	Air pump (BOM#5)
6	AMHAZESTADIUM2XIP	PTI107190060	Pressure Sensors (BOM#6)
7	AMHAZESTADIUM2XIP	PTI117020105	Peristaltic Pumps (BOM#7)
8	AMHAZESTADIUM2XIP	PTI104020441	Plastic four-way (BOM#8)
9	AMHAZESTADIUM2XIP	PTI104030303	Protective ring (BOM#9)
10	AMHAZESTADIUM2XIP	PTI107190045	Fluid sensors (BOM#10)
11	AMHAZESTADIUM2XIP	PTI101013886	Air pump holder(up) (BOM#11)
12	AMHAZESTADIUM2XIP	PTI101013887	Air pump holder(down) (BOM#12)
13	AMHAZESTADIUM2XIP	PTI101013882	Baffle (BOM#13)
14	AMHAZESTADIUM2XIP	PTI101013888	Four-way plate (BOM#14)
15	AMHAZESTADIUM2XIP	PTI203011429	Main board (BOM#15)
16	AMHAZESTADIUM2XIP	PTI101013875	Hanging roof plate (BOM#16)
17	AMHAZESTADIUM2XIP	PTI118020471	Foam (BOM#17)
18	AMHAZESTADIUM2XIP	PTI103990472	Fastener mounting hole B (BOM#18)
19	AMHAZESTADIUM2XIP	PTI101013872	Side plate (BOM#19)
20	AMHAZESTADIUM2XIP	PTI104020381	Spring handle (BOM#20)
21	AMHAZESTADIUM2XIP	PTI101013884	PCB plate (BOM#21)
22	AMHAZESTADIUM2XIP	PTI101013889	Cooling aluminum plate (BOM#22)
23	AMHAZESTADIUM2XIP	PTI104050081	Fluid tank (BOM#23)
24	AMHAZESTADIUM2XIP	PTGQTYZ004	Filter (BOM#24)
25	AMHAZESTADIUM2XIP	PTI104020348	Valve (BOM#25)
26	AMHAZESTADIUM2XIP	PTI104030164	Rubber seal for cap (BOM#26)
27	AMHAZESTADIUM2XIP	PTI103010042	Copper connector (BOM#27)
28	AMHAZESTADIUM2XIP	PTI104050030	Fluid container cap (BOM#28)
29	AMHAZESTADIUM2XIP	PTI103090056	Aeration connector (BOM#29)
30	AMHAZESTADIUM2XIP	PTI103010040	Filter (BOM#30)
31	AMHAZESTADIUM2XIP	PTI103110001	Spring (BOM#31)
32	AMHAZESTADIUM2XIP	PTI106080090	Switching Power Supply (BOM#32)
33	AMHAZESTADIUM2XIP	PTI107190013	Filter (BOM#33)
34	AMHAZESTADIUM2XIP	PTI101014354	Lock bracket (BOM#34)
35	AMHAZESTADIUM2XIP	PTI104080012	Fluid pipeline connector (BOM#35)
36	AMHAZESTADIUM2XIP	PTI101013876	Housing (BOM#36)
37	AMHAZESTADIUM2XIP	PTI101013874	BOTTOM PLATE (BOM#37)
38	AMHAZESTADIUM2XIP	PTI117990054	Hasp lock (BOM#38)
39	AMHAZESTADIUM2XIP	PTI118990100	Elastic band Velcro (BOM#39)
40	AMHAZESTADIUM2XIP	PTI108019006	Power cord (1.2m) (BOM#40)
41	AMHAZESTADIUM2XIP	PTI106130074	THERMAL SWITCH (BOM#41)
42	AMHAZESTADIUM2XIP	PTI106140002	Waterproof power plug (BOM#42)
43	AMHAZESTADIUM2XIP	PTI201030414	Quick lock hanger (BOM#43)
44	AMHAZESTADIUM2XIP	PTI103030445	Plum handle screw (BOM#44)
45	AMHAZESTADIUM2XIP	PTI101013885	THERMAL SWITCH Plate (BOM#45)
46	AMHAZESTADIUM2XIP	PTI104020550	Waterproof connector (BOM#46)
47	AMHAZESTADIUM2XIP	PTI104020155	Plastic hasp lock (BOM#47)
48	AMHAZESTADIUM2XIP	PTI107250012	LCD (BOM#48)
49	AMHAZESTADIUM2XIP	PTI203092058	Control board (BOM#49)
50	AMHAZESTADIUM2XIP	PTI103010209	Quick Connector (BOM#50)
51	AMHAZESTADIUM2XIP	PTI107110001	Potentiometer (BOM#51)
52	AMHAZESTADIUM2XIP	PTJ107110010	Potentiometer cover (BOM#52)
53	AMHAZESTADIUM2XIP	PTI107110009	Potentiometer cover (BOM#53)
54	AMHAZESTADIUM2XIP	PTI104030305	Gasket (BOM#54)
55	AMHAZESTADIUM2XIP	PTI106150049	Waterproof socket (BOM#55)
56	AMHAZESTADIUM2XIP	PTI103100022	Cannon (BOM#56)
57	AMHAZESTADIUM2XIP	PTI106120013	Overloaded protector (BOM#57)

58	AMHAZESTADIUM2XIP	PTF1100000469	Waterproof power socket (BOM#58)
59	AMHAZESTADIUM2XIP	PTI103030047	SAFETY HOOK (BOM#59)
60	AMHAZESTADIUM2XIP	PTI101013873	Nozzle (BOM#60)
61	AMHAZESTADIUM2XIP	PTI101014355	Nozzle holder (BOM#61)
62	AMHAZESTADIUM2XIP	PTI101013883	Front cover (BOM#62)
63	AMHAZESTADIUM2XIP	PTI101013879	Air duct bottom plate (BOM#63)
64	AMHAZESTADIUM2XIP	PTI118020444	Absorbent sponge (BOM#64)
65	AMHAZESTADIUM2XIP	PTI103100023	Cannon (BOM#65)
66	AMHAZESTADIUM2XIP	PTI110050240	LCD button panel (BOM#66)
67	AMHAZESTADIUM2XIP	PTI101014353	PVC fixing sheet (BOM#67)
68	AMHAZESTADIUM2XIP	PTI104020098	Plastic cylinder (BOM#68)
69	AMHAZESTADIUM2XIP	PTI101013896	Base (BOM#69)
70	AMHAZESTADIUM2XIP	PTI101014030	Heat filter (BOM#70)
71	AMHAZESTADIUM2XIP	PTI101013895	Outer cover (down) (BOM#71)
72	AMHAZESTADIUM2XIP	PTI101013894	Support plate (BOM#72)
73	AMHAZESTADIUM2XIP	PTI117040021	THERMOCOUPLE (BOM#73)
74	AMHAZESTADIUM2XIP	PTI103020314	Heater (BOM#74)
75	AMHAZESTADIUM2XIP	PTI103020265	Heat-conducting aluminum (BOM#75)
76	AMHAZESTADIUM2XIP	PTI103990494	Straight connector (BOM#76)
77	AMHAZESTADIUM2XIP	PTI104020489	sealing fin (BOM#77)
78	AMHAZESTADIUM2XIP	PTI103020264	briquetting (BOM#78)
79	AMHAZESTADIUM2XIP	PTI101014028	Top baffle (BOM#79)
80	AMHAZESTADIUM2XIP	PTI101013899	outer cover (up) (BOM#80)
81	AMHAZESTADIUM2XIP	PTI101013877	Housing cover (BOM#81)
82	AMHAZESTADIUM2XIP	PTI117060050	Blower (BOM#82)
83	AMHAZESTADIUM2XIP	PTI101013878	Fan plate (BOM#83)
84	AMHAZESTADIUM2XIP	PTI101013880	Air duct side plate (BOM#84)
85	AMHAZESTADIUM2XIP	PTI101013900	Air duct top plate (BOM#85)
86	AMHAZESTADIUM2XIP	PTI104020488	Rotomolded Box front cover (BOM#86)
87	AMHAZESTADIUM2XIP	PTI201021116	Heater (BOM#87)
	AMHAZESTADIUM2XIP	PTIAMIICAP	CAP ASSEMBLY